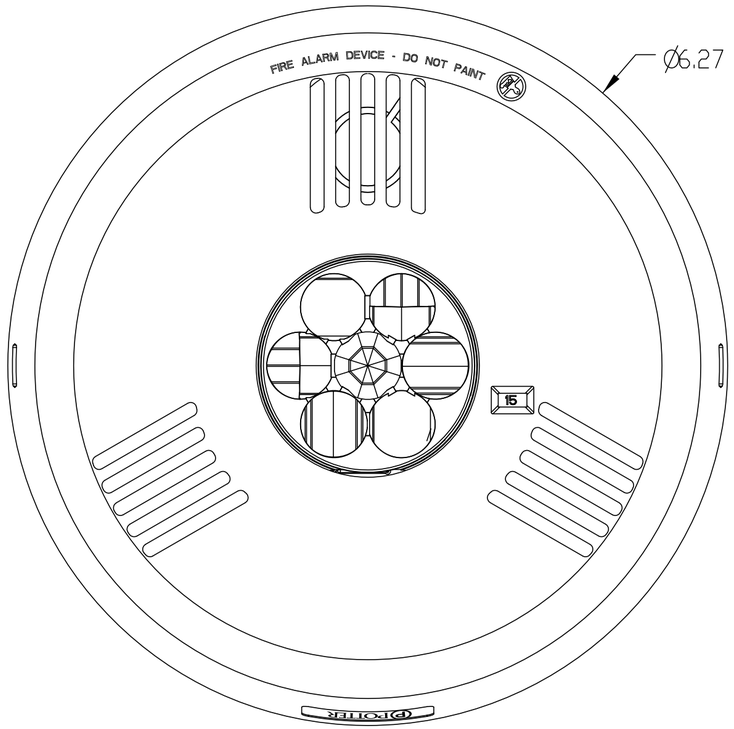
FIRE ALARM DEVICE - DO NOT PAINT
Ø6.27
15
PROTEK

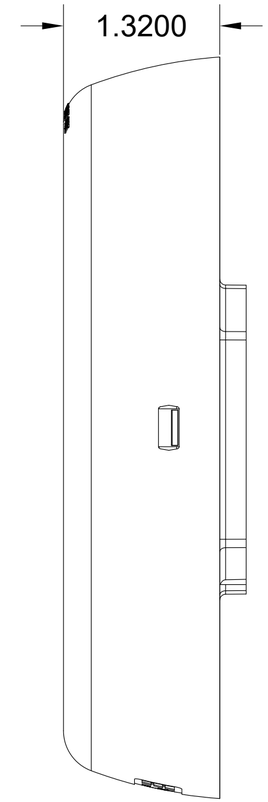
1.3200

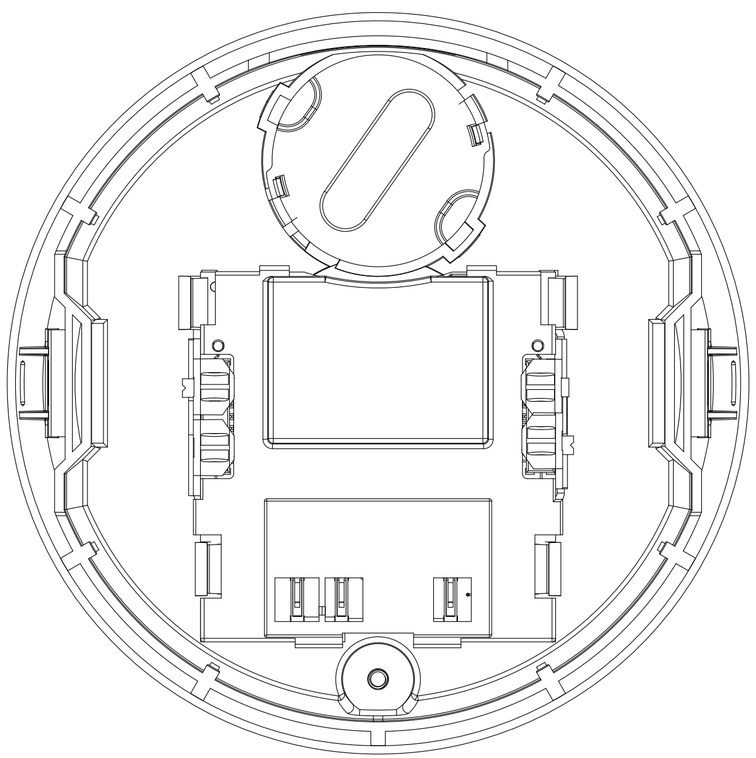

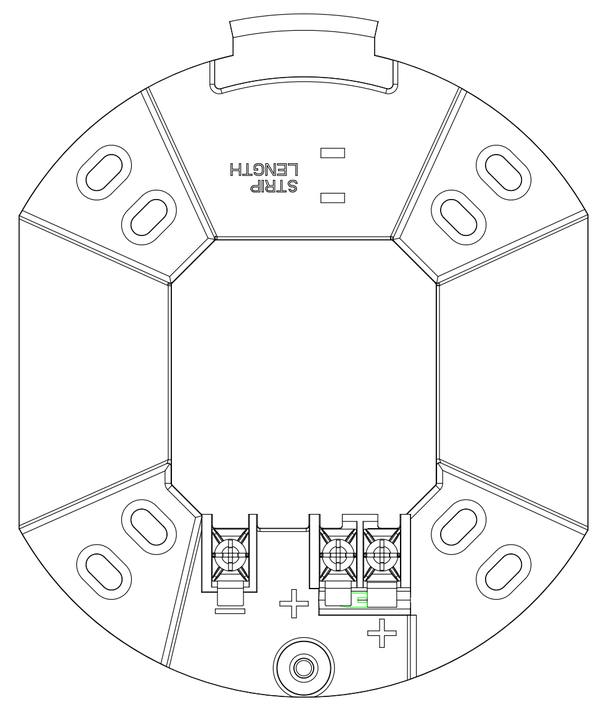
STRIP
LENGTH
+
+